Silent Inverter
Operation Manual

WC P9000Si • 811991

WELLING & CROSSLEY 2 YEAR WARRANTY

EURO 5

APPLICATIONS

1. Introduction

Congratulations on your purchase of a Welling & Crossley P9000Si Silent Invertor. It's great for powering your home during outages, keeping appliances and medical devices running smoothly. Perfect for camping and RV trips, outdoor events, food trucks or mobile services. It can also handle power tools at construction sites and ensure small businesses stay operational when the power goes out.

With clean, efficient power, it's ready for anything life throws your way! With acoustic casing and forced fan cooling, the W&C P9000Si throttles back under light load to reduce noise and conserve fuel.

Please read this manual carefully before operating as it provides information regarding the operation and maintenance of your generator to ensure reliable operation.

2. Construction and Key Features

- 2 x Outlets single phase. 1 x 15A, 1 x 32A
- 1 x USB-A 18W 1 x USB-C 15W
- Weather resistant outlets (IP66)
- Recoil starting or eStart (remote wireless and 2 wire starting enabled)
- Acoustic Casing for noise reduction
- 4-Stroke, air cooled, OHV engine
- Forced fan cooling
- 27L fuel tank
- Digital V/F/T Display (Volts, Frequency, Time)
- Low oil alarm, overload alarm, output indicator
- 2 year Welling and Crossley Warranty

3. Important icons

The design and manufacture of your W&C P9000Si Generator places a premium on the safety of the user. However, due to the combination of a highly flammable fuel source (petrol), heat from the engine and high electrical voltage output, due care and attention must be taken at all times. **These icons will be used throughout the manual.**

	Warning - Electrical safety.
	Danger – Potential consequences of use outside of intended application(s). Includes environmental condition warnings.
	Warning / Caution: - Indicates a hazardous situation which, if not strictly complied with, may result in property damage.
	Read carefully. This important information will simplify operation and aid understanding.

4. Contents

1. Introduction 2
2. Construction and Key Features 2
3. Important icons 2
4. Contents 3
5. Know your generator 4
6. ECO MODE – Low Idle switch 5
7. Circuit Breakers 5
8. Connecting electrical devices 5
9. Connecting the battery 6
10. Electrical Safety 6
11. Generator Specifications 7
12. Warnings 8
13. Operators Checklist 10
14. Getting Started 11
    - 14a. Check the Engine Oil 11
    - 14b. Check the Fuel Level 13
    - 14c. Safe Fuel Handling 13
    - 14d. Starting the Generator 14
    - 14e. Maximum Electrical Capacity 15
    - 14f. Stopping the Generator 16
15. Maintenance 17
    - 15a. Air Filter 18
    - 15b. Spark Plug 18
    - 15c. Cleaning 19
    - 15d. Oil Changes 19
    - 15e. Valve Clearance 20
    - 15f. Cleaning the Spark Arrestor 20
16. Storage and Transportation 20
17. Trouble Shooting Guide 21
18. Warranties – Terms and Conditions 23

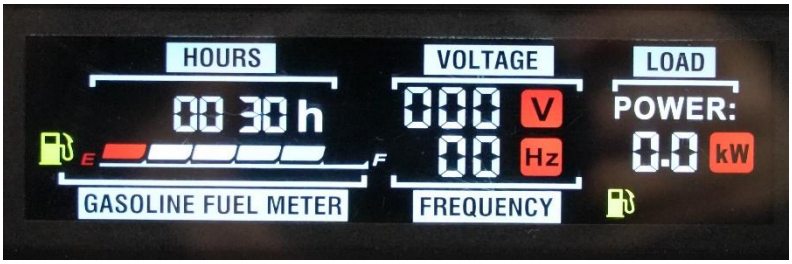

5. Know your generator

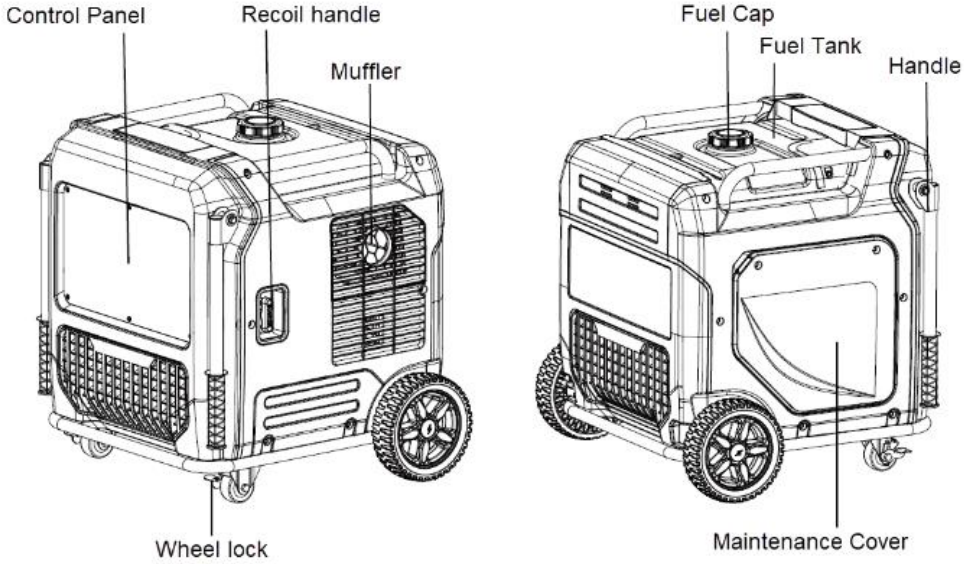

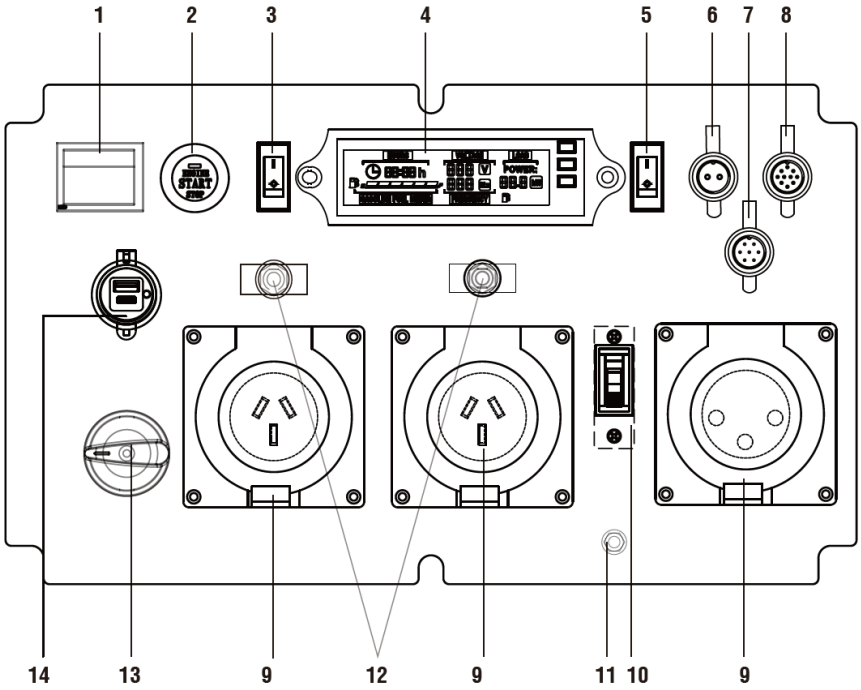

1: Engine Switch
2: Push button START/STOP
3: Low Idle
4: Data Center
5: 2 wire control switch
6: 2 wire control connector
7: ATS
8: PCB
9: AC 240V Socket
10: Circuit breaker
11: Grounding Terminal
12: AC Circuit Protector
13: Fuel Switch
14: DC 5V USB 1 x USB-A 18W 1 x USB-C 15W

6. ECO MODE – Low Idle switch

This generator is equipped with an LOW IDLE Switch.

Engaging this switch allows the system to regulate the engine speed and automatically adjust its fuel consumption to match the required load. When the electrical load changes, the generator engine will automatically speed up and slow down as needed.

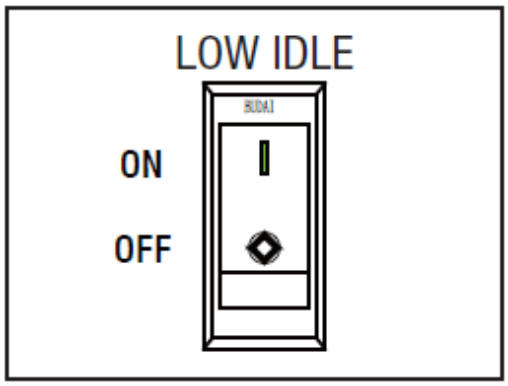

This reduces fuel consumption and noise levels, while extending runtime and engine's lifespan.

Keep this switch engaged ONLY when the power load requirement is LESS THAN 75% of the rated watts. **i.e. 6150 watts**

Never engage the switch when the total load is more than 75% of the rated watts.

The generator engine must run at full speed to supply power for anything over 75% of the rated watts.

7. Circuit Breakers

The circuit breakers protect the individual AC and DC circuits.

The AC circuit breaker will activate when the AC outlets exceed their rated Amps.

The DC circuit breaker will activate when the DC 12V and USB outlet rating is exceeded.

When the circuit breaker activates, turn off and disconnect the device from its respective outlet, then press the circuit breaker to reset.

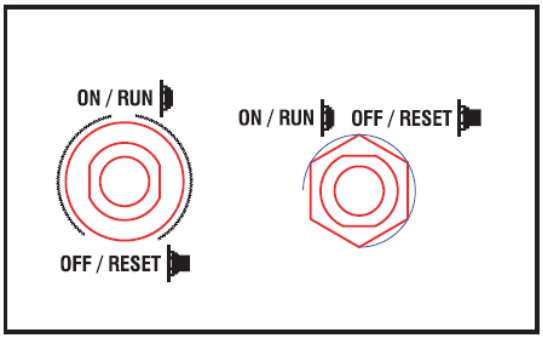

8. Connecting electrical devices

1. Before connecting electrical devices, allow the generator to run for a few minutes to stabilize the speed and voltage output.
2. Select the appliance with the highest wattage, and make sure it is turned off. Plug the appliance into the generator and power it on. Allow the engine rpm to stabilize.
3. Repeat step 2 to plug in each additional device.

Avoid plugging in or starting multiple devices at the same time.

9. Connecting the battery

The generator is shipped with the battery's negative (-) terminal disconnected to maximize safety.

To start the generator using electric start, the battery must be connected.

To connect the battery:

1. Turn the battery cover knob to the unlocked position, and remove the access cover from the back panel.

2. Loosen the rubber belts and pull out the battery.

3. Remove the cover from the battery's negative (-) terminal and connect the black cable to the battery's negative (-) terminal. The generator's positive pole has already been connected.

Double check to confirm that the connection is secure.

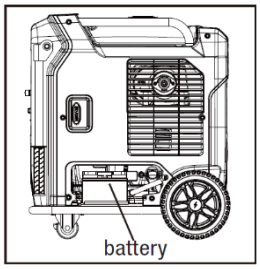

4. Return the battery into position and use the rubber belts to fasten the battery securely in place.

5. Reinstall and secure the battery access cover.

NOTE: If you do not plan to use the generator for a long period of time, we recommend to DISCONNECT the negative battery cable from the battery to protect the battery from losing charge. After disconnecting the cable, cover the free end with an insulator such as electrical tape. You may also choose to use a trickle charger (not included) to maintain battery charge.

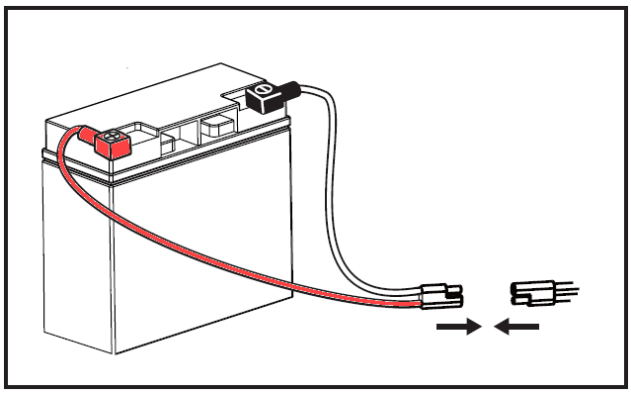

10. Electrical Safety

Use a Residual Current Device (RCD) or Ground Fault Circuit Interrupter (GFI) in highly conductive areas such as metal decking or steel work. Extension cords with in-line RCD's are recommended for these operations to maximize safety.

If connecting the generator to a building's electrical system for standby power, you MUST consult a qualified electrician and install a transfer switch.

Such connections must comply with local electrical laws and codes. Failure to comply can create a back-feed, which may result in serious injury or death to utility workers.

11. Generator Specifications

Model	WC P9000Si Silent Inverter
Max. AC Output	9000W
Rated AC Output	8200W
Rated motor speed	3000 rpm
Rated Voltage	240V AC Single Phase
Engine Model	WC-460B: Euro 5 emissions compliant
Engine Type	4 stroke, OHV, forced fan cooling.
Displacement	459cc
Spark Plug	Torch F7RTC, Champion RN9YC

Fuel Type	Petrol – 91 octane unleaded. > 1500m - 95 octane is recommended
Fuel Tank Capacity	27L
Fuel Consumption	1.45 L/Hr @ 1/4 load
Oil	1.2L SAE10W-30.
Decibels @ 7m distance	64 dBA @ 7m
Dimensions and weight	L: 670mm W: 735mm H: 755mm 99kg
Packaging (LxWxH)	750 x 700 x 775mm

Engine Starting	Recoil, eStart and wireless starting
Electrical Outlets (230V)	1 x IP66 15 Amp socket 1 x IP66 32 Amp socket 1 x USB Type A (18W) 1 x USB Type C (15W)
Battery	12V 10Ah

12. Warnings

	Read the manual carefully before starting and retain for future reference. DO NOT Operate this generator until you have read ALL safety, operation, and maintenance instructions.
	The warnings and precautions discussed in this manual cannot cover all possible conditions and situations that may occur. It must be understood by the operator that common sense and caution are factors which cannot be built into this product but must be supplied by the operator.
	Failure to follow the instructions may result in property damage, INJURY or DEATH.
	This appliance is not intended for use by persons (including children) with reduced physical, sensory or mental capabilities, or lack of experience and knowledge, unless they have been given supervision or instruction concerning use of the appliance by a person responsible for their safety. Children should be supervised to ensure that they do not play with the appliance.

Before use, check for loose or damaged parts, signs of oil or fuel leaks, and any other condition that may affect proper operation. Repair or replace all damaged or defective parts immediately.

- Locate all operating controls and safety labels.
- Operate only on level surfaces.
- Protect generator from excessive moisture, dust, or dirt.
- Ensure all safety guards are always in place and in proper working order.
- DO NOT allow any material to block the cooling slots.
- Never allow the generator to run unattended.
- Turn off the generator before leaving the area.

DANGER: TOXIC FUMES:

The exhaust of the generator engine contains carbon monoxide, an odorless, colourless, poison gas. Running an engine indoors may cause death.

- NEVER use generator inside any building or any kind of enclosure, EVEN IF doors and windows are open.
- Place the generator in a well-ventilated area and consider wind strength and air flow when positioning the generator.

DANGER: MOVING PARTS:

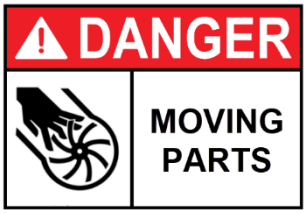

Moving parts can cause severe injury. Keep hands and feet away.

- DO NOT operate generator with covers, shrouds, or guards removed.
- DO NOT wear loose-fitting clothing, dangling drawstrings or items that could become caught. Tie up long hair and remove jewellery.

DANGER: FIRE OR EXPLOSION:

Petrol is highly flammable and extremely explosive.

- Fire or explosion can cause severe burns or death.
- Keep flammable items away while handling gasoline.
- Keep fire extinguisher handy and be prepared if a fire starts.
- Use proper fuel storage and handling procedures. DO NOT store fuel or other flammable materials nearby.
- Fill fuel tank outdoors and in a well-ventilated area with the generator stopped.
- Avoid overfilling the fuel tank. Leave a 25mm air gap to allow for heat expansion.
- Always wipe off spilled fuel and wait until the fuel has dried before starting the generator.
- Empty the fuel tank before storing or transporting the generator.
- NEVER operate the generator with known leaks in the fuel system.

WARNING: HOT SURFACE:

The running generator produces heat. Severe burns can occur on contact.

- DO NOT touch generator while operating or just after stopping. Avoid contact with hot exhaust gases.
- Maintain at least three feet of clearance on all sides to ensure adequate cooling.
- Combustible material can catch fire on contact. Maintain at least one metre of clearance from any combustible materials.

WARNING: ELECTRICAL SHOCK:

This generator produces powerful voltage and the electricity CAN KILL YOU.

- To reduce the risk of electrical shock, DO NOT use electrical cords that are worn, frayed, bare or otherwise damaged.
- DO NOT touch bare wires or receptacles.

- DO NOT operate the generator while directly exposed to wet weather. Keep the generator dry.
- DO NOT handle generator or electrical cords while standing in water, while barefoot, or while hands or feet are wet.

13. Operators Checklist

OPERATING AREA - This generator is intended for outdoor use.

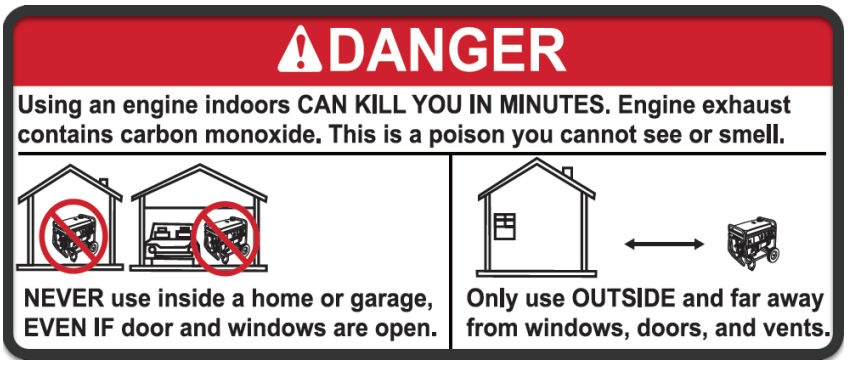

- Only use OUTSIDE and place the generator in a well-ventilated area.
- Only operate the generator on a flat, level surface and in a clean, dry operating environment.
- Allow one metre clearance on all side of the generator while operating it outdoors.
- Generators used for construction sites may be subject to additional rules and regulations.

DANGER: TOXIC FUMES - The exhaust of the generating set contains carbon monoxide, an odorless, colourless, poison gas. Using engine indoors CAN KILL YOU.

- NEVER use inside any building or any kind of enclosure, EVEN IF doors and windows are open.
- Place the generator in a well-ventilated area and carefully consider wind and air currents when positioning generator.

OPERATING CONDITION - Check for loose or damaged parts, signs of oil or fuel leaks, and any other condition that may affect proper operation. Repair or replace all damaged or defective parts immediately.

- Remove any excessive dirt or debris, especially around the muffler and recoil starter.
- DO NOT move or tip the generator during operation. Use generator only for intended uses. If you have questions about intended use, ask your local dealer.

DANGER: Failing to correct problem(s) before operation could result in property damage, serious injury or DEATH.

14. Getting Started

DO NOT Operate this generator until you have read ALL safety, operation, and maintenance Instructions listed in this manual.

UNPACKING –

- Remove the generator from the shipping carton.
- Place the shipping carton on a solid, flat surface.
- Carefully cut each corner of the carton box from top to bottom.
- Fold each side flat on the ground.

PLEASE RECYCLE

14a. Check the Engine Oil

WARNING: This engine is not filled with oil from the factory. Any attempt to crank or start the engine before it has been properly filled (with the recommended type and amount of oil) may result in engine damage and void your warranty.

Oil Capacity 0.7L 10 – 30W SAE

Place the generator on a level surface with engine stopped.

- Unscrew the two knobs and remove the maintenance cover from the side panel Unscrew the oil dipstick from the engine.

- Using an oil funnel or appropriate dispenser, slowly add oil into the oil fill being careful not to overfill the unit. Fill the crankcase to the upper fill line so you can visually see the oil coming halfway up the oil fill threads

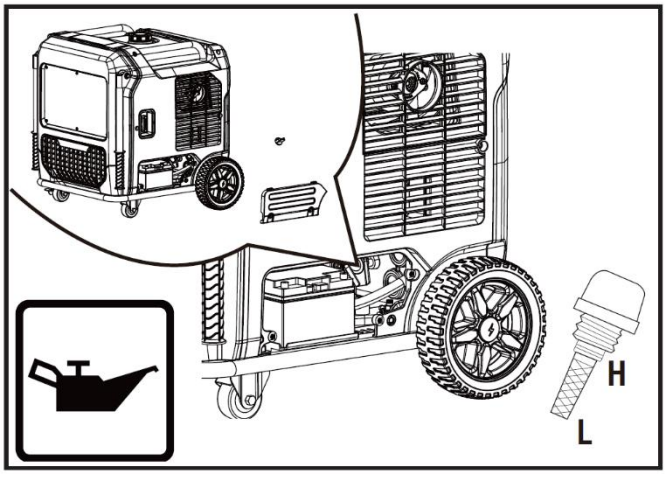

Oil is a major factor affecting performance and service life of an engine. Use 4-stroke automotive oil SAE10W-30. **Regular oil changes will extend the life of your generator.**

LEVEL GROUND - Operate generator only on level surface. The engine is equipped with a low oil sensor that will automatically stop the engine when the oil level falls below the safe limit. To avoid the inconvenience of an unexpected shutdown, fill to the upper limit and check the oil level regularly.

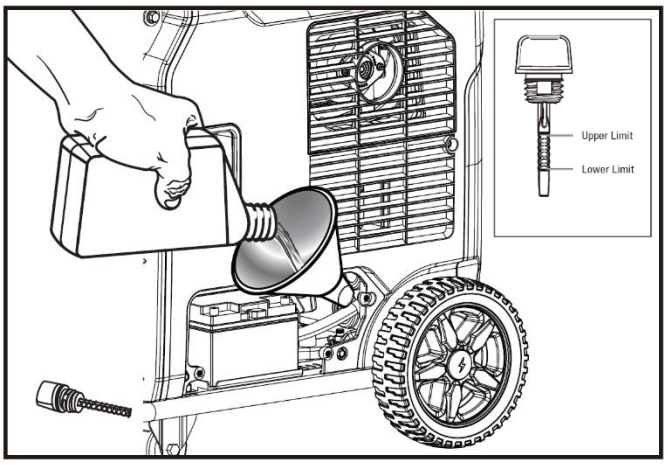

Changing the oil after the first 5 hours of operation is strongly recommended

Using high-quality oil and performing regular oil changes are essential for a petrol-powered generator's reliability and longevity.

Clean oil reduces friction, prevents overheating, and protects internal components from wear.

Neglecting oil maintenance can lead to engine damage, reduced efficiency, and costly repairs. Routine oil care keeps your generator running smoothly when you need it most.

Select a quality oil with a viscosity based on the expected running conditions.

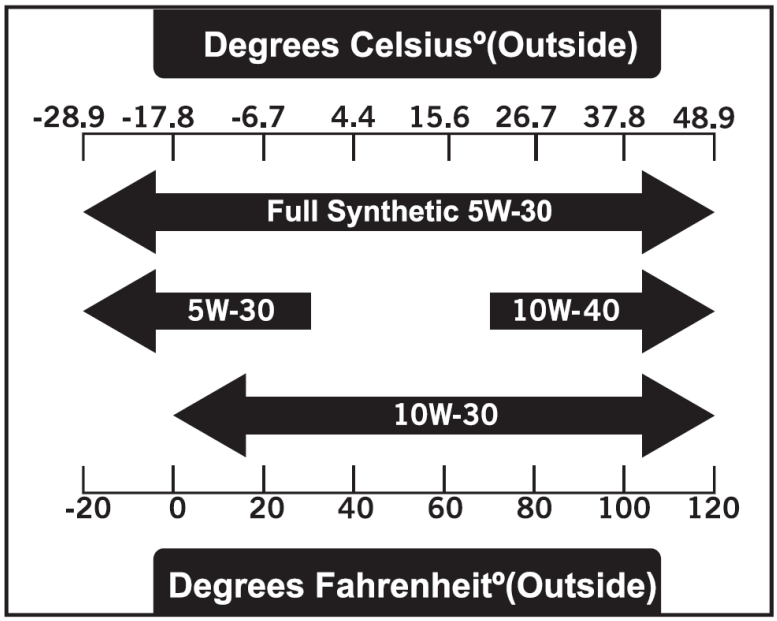

For commercial use, where generators run for extended periods, high-quality oil and frequent oil changes are even more critical.

Continuous operation increases engine stress, making proper lubrication essential to prevent overheating and wear. Regular maintenance ensures peak performance, minimizes breakdowns, and extends the generator's lifespan—keeping your business powered reliably when it matters most.

Warranty Statement – Australia & New Zealand

Welling & Crossley generators are covered by a **24-month warranty** from the date of purchase. However, if the generator is used for **commercial applications**, the warranty period is limited to **12 months**. This warranty covers defects in materials and workmanship under normal use and maintenance, subject to the terms and conditions outlined in our warranty policy.

For full warranty details, including exclusions and claim procedures, please refer to the official warranty terms at the rear of this manual

14b. Check the Fuel Level

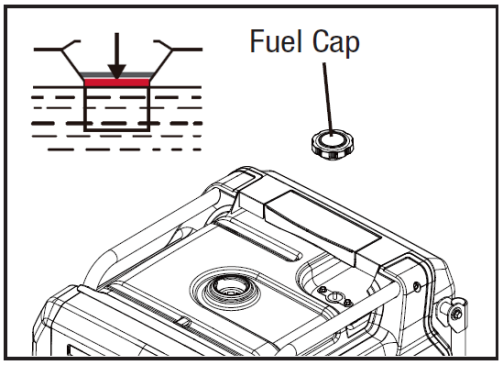

To add petrol:

- Make sure the generator is shut OFF and on a level surface. Unscrew the fuel cap and set it aside.

The fuel cap may be tight and hard to unscrew.

- Slowly add unleaded petrol to the fuel tank being careful not to overfill.

NEVER fill the fuel tank to the very top. Petrol will expand and spill during use, even with the fuel cap in place. Leave at least a 6mm air gap at the top of the tank

- Reinstall fuel cap and wipe clean any spilled petrol with a dry cloth.

To check fuel level:

During operation, the fuel level will be displayed on the DATA CENTER of the digital display. If the fuel level is low, refill the fuel tank before starting your generator for the next time.

14c. Safe Fuel Handling

DANGER: FIRE OR EXPLOSION - Petrol is highly flammable and extremely explosive. A fire or explosion can cause severe burns or death.

- Keep flammable items away while handling petrol.
- Fill fuel tank outdoors and in a well-ventilated area with the engine stopped.
- Avoid the use of open containers.
- Always wipe off spilled fuel and wait until the fuel has dried before starting the engine.
- DO NOT operate the engine with known leaks in the fuel system.
- Use proper fuel storage and handling procedures. DO NOT store fuel or other flammable materials nearby.
- Empty the fuel tank before storing or transporting this engine.
- Keep fire extinguisher handy and be prepared if a fire starts.

CAUTION: NEVER use engine or carburettor cleaner products in the fuel tank or permanent damage may occur.

- It is important to prevent gum deposits from forming in fuel system, such as the carburettor, fuel filter, fuel hose or tank during storage. Also, any alcohol-blended fuels (called gasohol, ethanol or methanol) can attract moisture, which leads to separation and formation of acids during storage.
- Acidic fuel can damage the fuel system of an engine while in storage. Be sure to review the Storage instructions.
- Petrol/Alcohol Blends: can be acidic and attract moisture and therefore are not recommended. Effects of old, stale or contaminated fuel may void your warranty.

CAUTION: To minimise gum deposits in your fuel system and to ensure easy starting, do not use fuel left over from the previous season.

14d. Starting the Generator

Before starting the generator:

Verify that the generator is outside on a dry, level surface. Allow at least one meter of clearance on all sides of the generator.

Check there is sufficient level of oil in the crankcase. Add oil if necessary

Make sure there is sufficient level of fuel in the tank. Add fuel if necessary

Before starting the generator turn the LOW IDLE mode switch to **OFF** and disconnect all electrical devices.

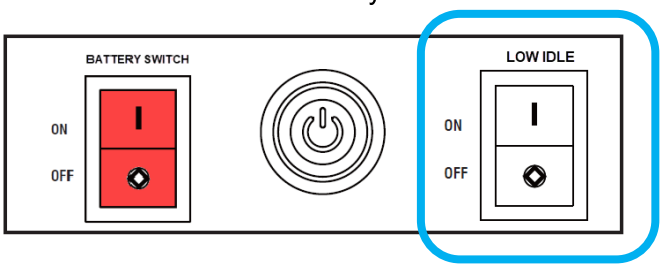

Manual Start

1. Twist the fuel switch to **RUN**.
2. Press the BATTERY SWITCH **ON.**
3. Pull recoil starter slowly until resistance is felt, then pull rapidly.

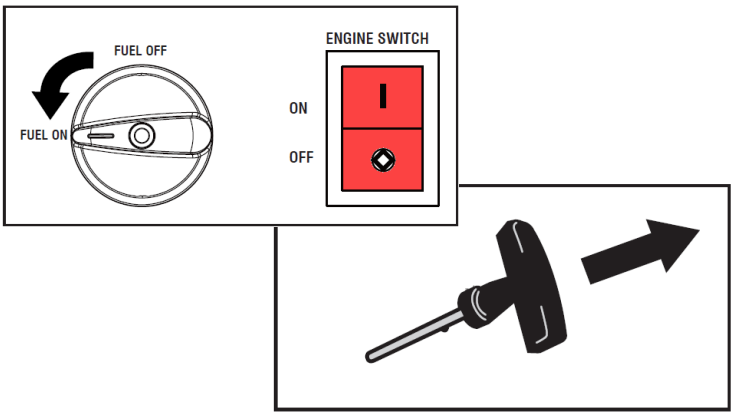

One Button Start (Electric Start)

1. Twist the fuel switch to **RUN.**
2. Press the BATTERY SWITCH **ON**.
3. Press the 'One Button' START button.

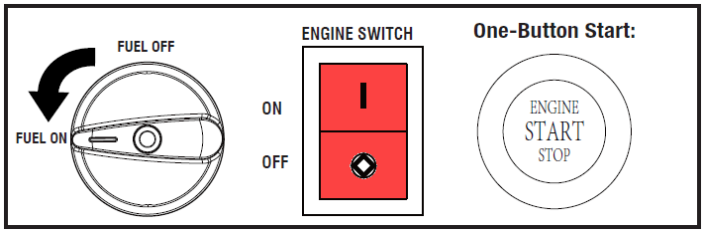

Remote Start (Electric Start)

1. Twist the fuel switch to **RUN**.
2. Press the BATTERY SWITCH **ON**.
3. Hold down the REMOTE START button on the wireless start for 3 seconds.

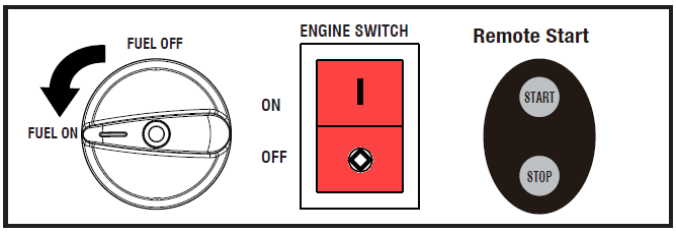

- If the engine fails to start after 3 attempts or stops after starting; inspect and ensure that the generator is placed on horizontal surface and check the fuel and engine oil levels.
- Loads under 75% of the maximum rated capacity (6150W) ECO Mode can be engaged

When connecting the generator with electrical equipment. DO NOT start or stop the engine while electrical equipment is in an 'ON' state.

Use of a ground fault circuit interrupter (RCD) is strongly encouraged, especially in any damp or highly conductive areas, such as metal decking or steel work.

CAUTION: Ensure that the recoil rope is not damaged and repair if required.

Take care when manual starting in case of kickback.

14e. Maximum Electrical Capacity

WARNING: NEVER overload the generator. Exceeding the capacity of generator can damage the generator and/or electrical devices connected.

All electrical devices and appliances have a power rating.
Ensure your generator can supply enough rated (running) and surge (starting) watts for the electrical devices you intend to power **at the same time**.

Calculating the Expected constant load

1. Select the electrical devices you intend to power at the same time.
2. Calculate that the total amount of power you need to run all devices and ensure it is less than the rated output of the generator.
   You may need to check the items rated (running) watts in their manuals or from the manufacturers nameplate. If the appliance, tool or motor does not give wattage, **multiply Volts times Ampere rating to determine Watts (volts× amps = watts).**

Calculate the Surge load requirement

Devices which have an induction type electric motor i.e. garage door openers, air compressors, pumps, refrigerators, circular saws etc create additional load as they start up.
This surge current can be 3 - 5 times greater than the appliance rated size.

i.e. Starting 'Direct on Line', a water pump rated at 750W may momentarily require a surge current equivalent to 2300W or greater.

NOTE: Not all motors start at the same time so allow total surge watts for the largest electric motor you intend to power.

3. Identify how many surge (starting) watts you may need.

Add the surge wattage requirement on top of the expected constant load requirement to determine the size required.

Factoring in 30% more output than you expect to use is good practice to ensure the generator is not stressed. This will ensure longevity.

Invertor Type generators are not recommended for rapidly changing electrical loads.

Inverter generators throttle back to save fuel and reduce noise.

They have no ability to anticipate sudden changes in load.

AC OVERLOAD RESET

If the AC power outlet is overloaded, the circuit breaker will cut out the power to the device.

14f. Stopping the Generator

WARNING: NEVER stop the engine with electrical devices connected and the connected devices turned **ON.**

- Turn off all electrical equipment and disconnect all from the generator.

Unplugging running devices can cause damage to the generator.

- Allow the generator to run at no load for a few minutes to stabilize internal temperatures of the engine and generating set.
- Press One Button **STOP** or press the Remote Stop Fob **STOP** button,
- Turn the fuel switch to **OFF**
- Press the BATTERY SWITCH **OFF**

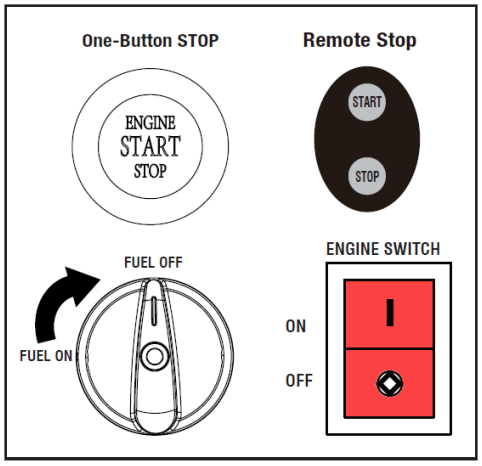

In cases when you are in a hurry and do not want to wait for the generator to automatically shut down, the manual shutoff feature is available. However, this method will leave stagnant fuel in the carburettor, possibly causing blockages, a shortened lifespan, and other maintenance issues. If this approach is frequently taken, make sure to drain your carburettor before any long storage periods.

15. Maintenance

It is the operator's responsibility to complete all scheduled maintenance in a timely manner. Correct any issue before operating the generator.
Follow the inspection and maintenance recommendations and schedules in this manual.

- Before servicing the generator, stop the generator, disconnect all electric devices and battery (if equipped) and allow the generator to cool down.

Accidental starts can cause severe injury or death. Remove and ground spark plug wire before performing any service.

Improper maintenance or failure to correct a problem before operation can cause a malfunction and result in property damage, serious injury or DEATH. Improper maintenance will void your warranty.

The filter element may contain PAHs, PAHs are harmful to your health. Please wear gloves for protection during air filter maintenance.

Follow the service intervals indicated in the chart below. Service your generator more frequently when operating in adverse conditions.
Contact your local service agent for parts or engine maintenance needs.

Engine oil	Check	Before each use or every 8 hours
	Replace	**First oil change after 5 hours** Thereafter, every 25 hours (0.7L)
Air filter	Inspect / clean	Frequently esp. in dusty conditions
	Replace	Every 50 hours *or less in dusty conditions*
Spark plug	Check and adjust	Every 100 hours
	Replace	Yearly
Valve clearance	Inspect and adjust	Yearly or every 50 hours

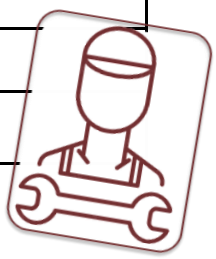

DO NOT modify the generator in any way.

The speed has been set at the factory and should not require readjustment. The generator supplies the correct rated frequency and voltage when running at factory settings. Tampering with the factory set governor will void your warranty. **NEVER** alter the governed speed.

Any unapproved adjustment will damage your engine and/or your electrical devices and void your warranty.

Consult your local authorised service agent for advice.

15a. Air Filter

NEVER run the engine without the air filter, as serious damage can result.
Regular cleaning will enhance the life of the engine.

Remove the cover of the air filter

Remove the foam filter element.

Wash in warm water and liquid detergent

Squeeze thoroughly and dry with a clean cloth.

Saturate in clean engine oil.

Squeeze in a clean, absorbent cloth to remove all excessive oil.

Place the filter in the assembly.

Refit the air filter and cover.

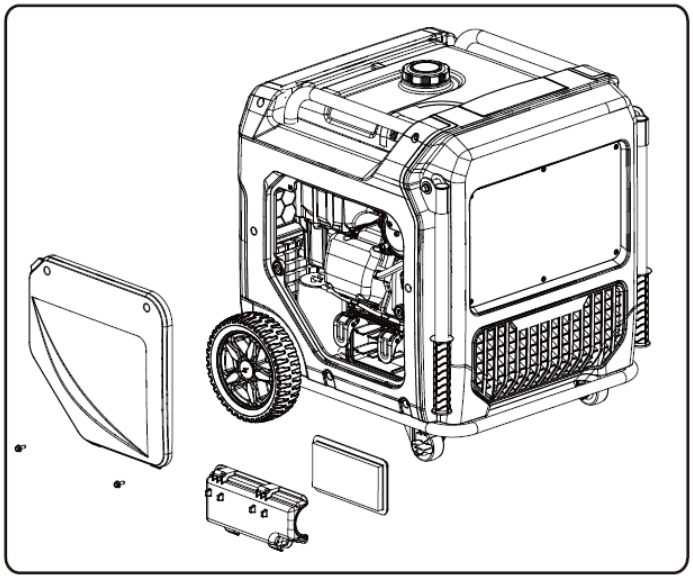

15b. Spark Plug

WARNING: Only use recommended spark plug or equivalent.

Spark plug gap: 0.7mm - 0.8mm

Spark Plug tighten Torque: 15-20 Nm (12 – 15 lb ft)

Spark Plug Model: **TORCH F7RTC, Champion RN9YC**

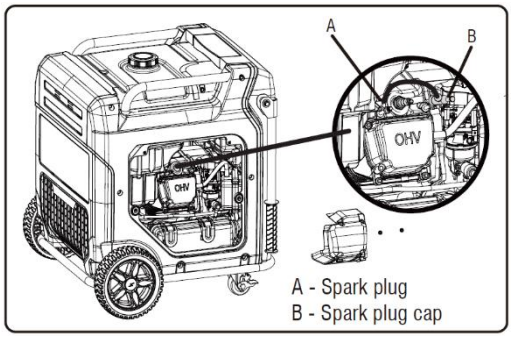

Clean any dirt from the spark plug cap and spark plug base.

Remove the spark plug cap. Loosen and remove the spark plug.

Inspect the spark plug and spark plug washer. Replace if it appears damaged or worn. Clean the spark plug threads and electrode with a wire brush before replacing.

Check spark plug gap. Carefully bend side electrode to adjust the gap if necessary.

Thread the plug into the engine by hand. Once the spark plug is seated, tighten to the recommended torque the attach the spark plug cap to the plug.

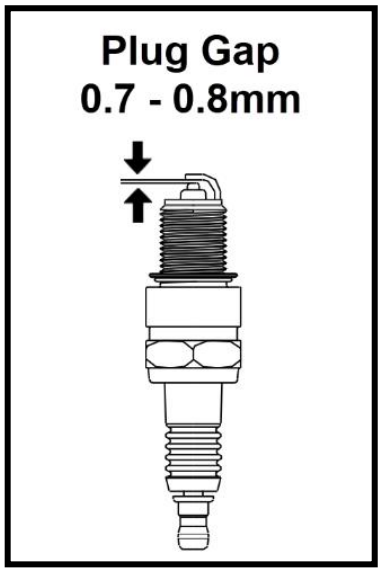

Replace the spark plug yearly.

The engine will start and run better

15c. Cleaning

Clean using damp cloths and mild cleaning agents, soft bristled brushes, vacuum or low pressure compressed air (Max 1.5 bar / 25 PSI)

Avoid using running water to clean the generator.

Water can enter the alternator through its cooling slots and damage the electrical windings.

15d. Oil Changes

Change the oil according to the recommended Maintenance Schedule.

In extremely hot, dirty or dusty conditions, change the oil more frequently

It is also necessary to drain the oil from the crankcase if it has become contaminated with water or dirt. Changing the oil when the engine is warm allows for complete drainage.

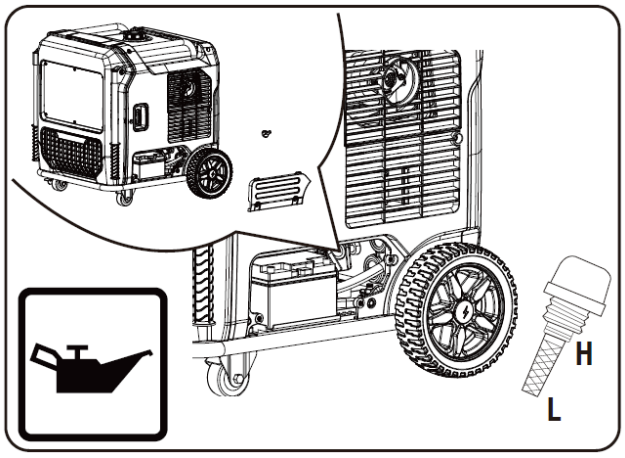

To change engine oil:

1. Remove the oil cap (A) and wipe dipstick clean.
2. Place a container underneath the oil drain plug to collect used lubricant as it drains.
3. Unscrew the oil drain plug (C) and remove.
4. Allow lubricant to drain completely.
5. Reinstall the oil drain plug (C) and tighten securely.
6. Fill the engine with oil until it reaches the **HIGH** (H) level on the oil filler cap.
7. Reinstall the oil cap.

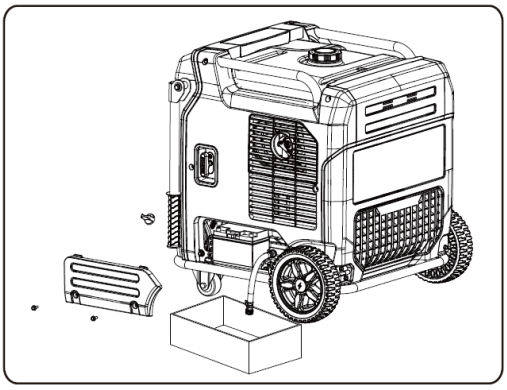

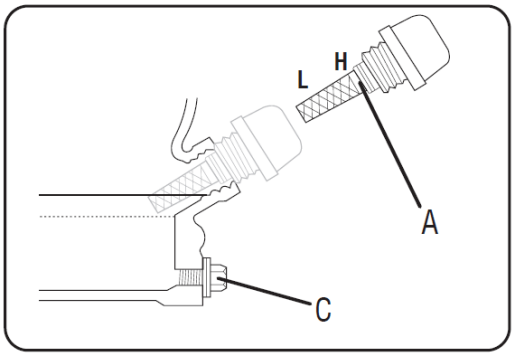

Take care not to overfill.

Overfilling with oil may make the engine hard to start or not start at all.

15e. Valve Clearance

Proper valve clearance is essential for prolonging the life of the engine. Check valve clearance per maintenance schedule.

Clearance Intake and Exhaust Valve: 0.1~0.15mm Torque 10 – 12NM

15f. Cleaning the Spark Arrestor

1. Allow the engine to cool completely before repairing the spark arrester.
2. Loosen the bolt (A) to remove the flange pressing plate (B) and the spark arrester(C).
3. Carefully remove carbon deposits on the filter screen of spark arrester (C) with a steel wire brush.
4. Replace the spark arrester (C) if it is damaged.
5. Place the spark arrester (C) on the muffler and reinstall it with the bolts removed in step 2.

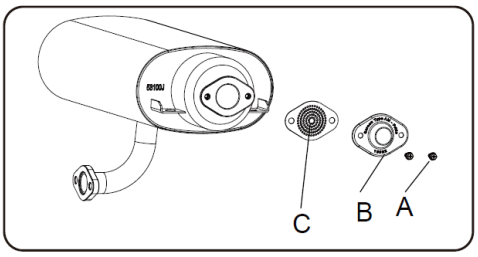

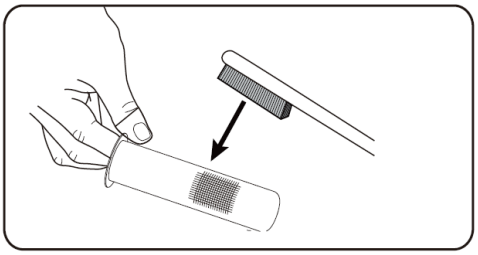

To prevent the bolts corroding into the muffler, coat the threads with a nickel or copper paste

16. Storage and Transportation

DANGER: FIRE OR EXPLOSION - Gasoline is highly flammable and extremely explosive. Always shut off fuel valve before storing or transporting this generator.

STORAGE - The generator should be started periodically (once a month) and allowed to run until warm.

SHORT TERM STORAGE – 30 to 60 days

- Drain the carburettor
- Disconnect the battery negative lead
- Add Fuel Stabiliser.

Follow the instructions of your preferred stabilizer and use the recommended ratio. Run the engine for 15 to 20 minutes, allowing the fuel stabilizer to mix with the fuel and circulate through the carburettor, and then top off with fuel. Filling the fuel tank full reduces the amount of air in the tank and helps fight deterioration of fuel.

LONG TERM STORAGE – Over 60 days

- Once the Generator is cool, clean with lint free cleaning clothes and low pressure compressed air. Avoid splashing water or using aggressive solvents.

  Take care not to drive dust or other contamination into the alternator cooling slots.
- Drain all fuel completely from the fuel hose and carburettor to prevent gum from forming.
- Turn off the fuel supply at the fuel valve.

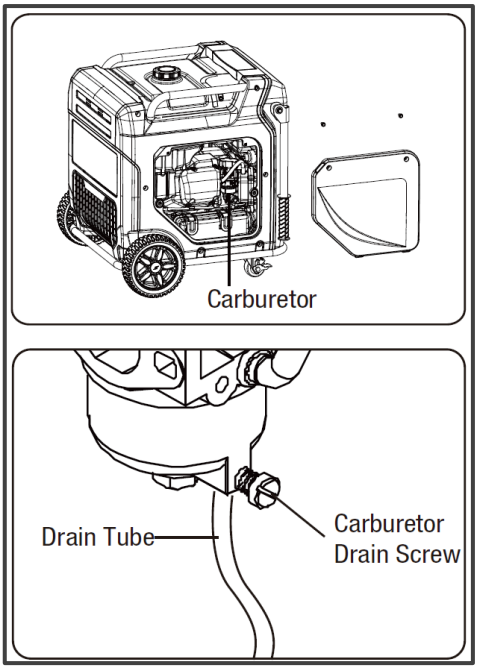

If the storage period will be substantial, consider protection against internal corrosion by changing the oil and lubricating the engine combustion chamber.

- **Remove the spark plug and pour about 15 ml of oil into the cylinder.**
- **Use the recoil starter to crank the engine slowly to distribute the oil and lubricate the cylinder.**
- **Reattach the spark plug**

Store the unit in a clean, dry area out of direct sunlight.

TRANSPORTATION - To prevent fuel spillage, when transporting or during temporary storage, the generator should be secured upright in its normal operating position, with all switches in the OFF position.

17. Trouble Shooting Guide

WARNING: Turn off the generator before starting any maintenance work.
Remove the spark plug cap and secure away from the spark plug.

Work methodically eliminating the most simple, basic and obvious potential causes first.

The W&C P9000Si can be serviced by any small engine mechanic

FAULT	POSSIBLE CAUSE	REMEDY
Engine will not start	Battery flat	Charge battery
	Engine switch set to 'OFF'.	1. Check the engine switch is in the on position
	No fuel.	2. Check that the fuel tap is on position 3. Check the fuel level and if necessary fill the tank as per instructions
	Stale Fuel	4. Drain and fill with full fuel
	Fouled fuel filter	Replace the fuel filter
	Insufficient engine oil.	5. The engine is equipped with a low oil sensor. The engine cannot be started unless the oil level is above the prescribed lower limit.
	No ignition.	6. Check for spark: • Remove the spark plug cap. • Clean any dirt from around the plug base, then remove the spark plug. • Check the spark plug gap. • Install the spark plug in the plug cap. • Turn the engine switch "ON". • Ground the spark plug thread to the motor body, pull the recoil starter to see if sparks jump across the gap. • If there is no spark, replace the plug. Consult a Customer Service Agent if necessary.
Engine lacks Power	Dirty air filter	Check the air filter Clean or replace as necessary
	Engine stored without treating or draining fuel. Or, refueled with bad fuel.	Drain fuel and refill with fresh fuel. If the problem continues, contact a qualified service center.
AC outlet not working	OUTPUT indicator is OFF, and OVERLOAD indicator is ON.	Check AC load. Stop and restart the engine. Check the cooling air inlet. Stop and restart the engine.
	AC Circuit protector(s) tripped.	Check AC load and reset AC circuit protector(s). If the power cord is equipped with an RCD, check that it hasn't tripped
	The fault may be with the power cords may be faulty.	Check any power cords for damage and continuity.
	Appliance may be defective	Try another appliance

18. Warranties – Terms and Conditions

This warranty is given in addition to the consumer guarantees found within the Australian Competition and Consumer Act 2010 (Cth) for goods purchased in Australia and the Consumer Guarantees Act 1993 NZ for goods purchased in New Zealand:

1) White International Pty Ltd / White International NZ Ltd (White International) warrant that all products distributed are free from defects in workmanship and materials, for their provided warranty period as indicated on the top or opposite side of this document. Subject to the conditions of the warranty, White International will repair any defective products free of charge at the premises of our authorised service agents throughout Australia and New Zealand if a defect in the product appears during the warranty period. If you believe that you have purchased a defective product and wish to make a claim under this warranty, contact us on our Sales Hotline on 1300 783 601, or send your claim to our postal address or fax line below and we will advise you as to how next to proceed. You will be required to supply a copy of your proof of purchase to make a claim under this warranty.

2) This warranty excludes transportation costs to and from White International or its appointed service agents and excludes defects due to non-compliance with installation instructions, neglect or misuse, inadequate protection against the elements, low voltage or use or operation for purposes other than those for which they were designed. For further information regarding the suitability of your intended application contact us on our Sales Hotline on 1300 783 601. If you make an invalid claim under this warranty, the original product will be sent back to you unrepaired.

3) This warranty refers only to products sold after the 1st January 2012, and is not transferable to another product type and only applies to the original owner, purchaser or end user, and is in addition to the consumer guarantees found within the Competition and Consumer Act 2010 (Cth) for goods purchased in Australia and the Consumer Guarantees Act 1993 (NZ) for goods purchased in New Zealand.

4) Our goods come with guarantees that cannot be excluded under the Australian Consumer Law. You are entitled to a replacement or refund for a major failure and for compensation for any other reasonably foreseeable loss or damage. You are also entitled to have the goods repaired or replaced if the goods fail to be of acceptable quality and the failure does not amount to a major failure. 2 YEAR WARRANTY.

5) To the fullest extent permitted by law, White International excludes its liability for all other conditions or warranties which would or might otherwise be implied at law. To the fullest extent permitted by law, White International's liability under this warranty and any other conditions, guarantees or warranties at law that cannot be excluded, including those in the Competition and Consumer Act 2010 (Cth), is expressly limited to: (a) in the case of products, the replacement of the product or the supply of equivalent product, the payment of the cost of replacing the product or of acquiring an equivalent product or the repair of the product or payment of the cost of having the product repaired, is at the discretion of White International or a 3rd party tribunal elected under the Competition and Consumer Act 2010 (Cth) for goods purchased in Australia and the Consumer Guarantees Act 1993 (NZ) for goods purchased in New Zealand; and

6) To the fullest extent permitted by law, this warranty supersedes all other warranties attached to the product or its packaging.

7) In the case of services, supplying the services again or the payment of the cost of having the services supplied again, is at the discretion of White International or a 3rd party tribunal elected under the Competition and Consumer Act 2010 (Cth) for goods purchased in Australia and the Consumer Guarantees Act 1993 (NZ) for goods purchased in New Zealand. 8) Our warranty commences from the date of purchase of the above mentioned pumps. Proof of purchase is required before consideration under warranty is given.

Record your date of purchase in the space below and retain this copy for your records.

Date of Purchase .....**Model Purchased** .....

Distributed By:

www.whiteint.com.au
www.whiteint.co.nz

Please always refer to our website for further technical information & new product innovations

Disclaimer: Every effort has been made to publish the correct information in this manual.
No responsibility will be taken for errors, omissions or changes in product specifications.

© 2024 Copyright White International Pty Ltd

TM ® - WARNING: Please be aware that various brands & products depicted within this document are subject to trademark, patent or design registrations. Infringement of any intellectual property contained within this document without express written authority by the appropriate intellectual property holder may result in further legal action to be taken. For any queries regarding use of the contained information please feel free to contact White International Pty Ltd.